DRAWING FOR CUSTOMER

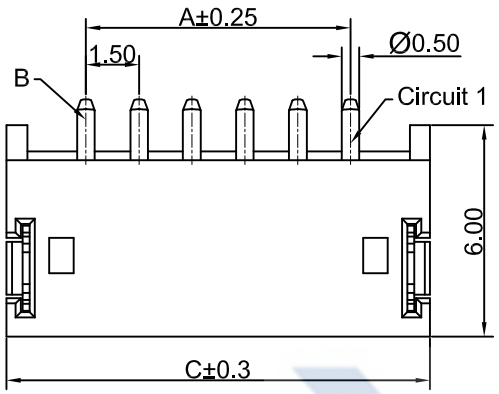

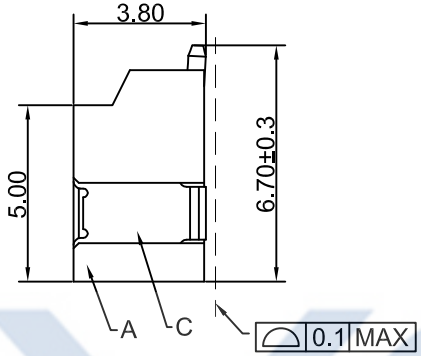

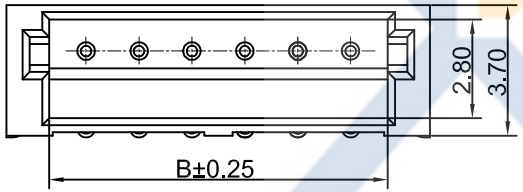

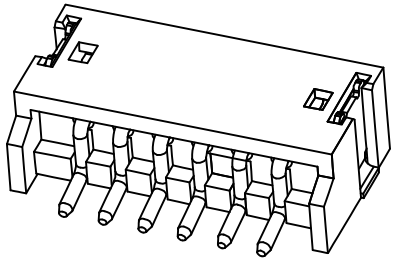

■SPEC.:
- ●Rated Voltage:125V AC,DC
- ●Rated Current:1.0A AC,DC
- ●Withstand Voltage:500V AC/minute
- ●Contact Resistance:20mΩ max
- ●Insulation Resistance:500MΩ min
- ●Temperature Range:-25℃~+105℃

■Material :
- ●Insulation(A): LCP UL94V-0
- ●Contact Pin(B):Brass
  Finish:Tin-Plated;over Nickel
- ●Solder Tab(C): Phosphor Bronze
  Finish:Tin-Plated;over Nickel

Poles	Dimensions(mm)		
	A	B	C
02	1.50	3.60	6.00
03	3.00	5.10	7.50
04	4.50	6.60	9.00
05	6.00	8.10	10.50
06	7.50	9.60	12.00
07	9.00	11.10	13.50
08	10.50	12.60	15.00
09	12.00	14.10	16.50
10	13.50	15.60	18.00
11	15.00	17.10	19.50
12	16.50	18.60	21.00
13	18.00	20.10	22.50
14	19.50	21.60	24.00
15	21.00	23.10	25.50
16	22.50	24.60	27.00

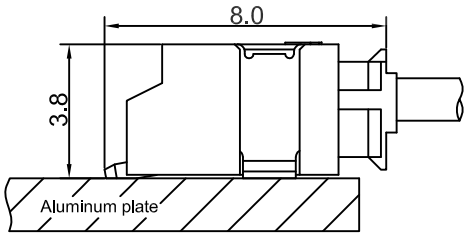

Assembly Layout

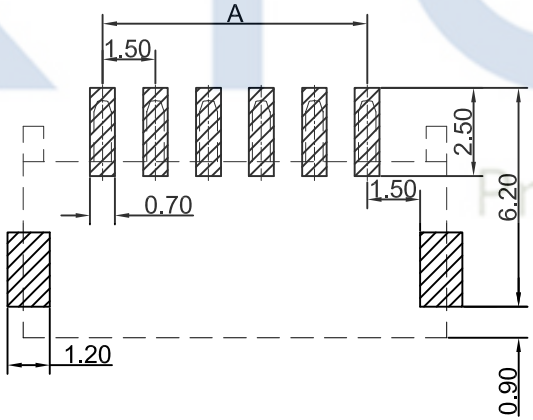

SUGGESTED PCB LAYOUT

KB924-XX X S R 6 A

- Pin No.
- 包装方式：
  T:TUBE（管装）
  R:REEL（卷装）
  P：PE （袋装）
- S:SMT / D:DIP
- R:Right Angle / V:Vertical
- Mold No.
- Version

XYCO Precision Connectors

XYCO 东莞市轩业电子科技有限公司
TEL: 0769-8297 9981/2/3 http://www.XYCO.com.cn

DATE 日期	VER 版本	CHANGE HISTORY 變更歷史	CHANGED NAME 修改後料號	DRAWING 變更者
2015-10-15	A		KB924-XXXSR6A	Devin

TOLERANCE 公 差: .X=±0.30 .XX=±0.25 .XXX=±0.15

DRAWING 設計者	Devin	KB924-XXXSR6A	
CHECKED 審查	Thomas	PART NO. 料號	
APPROVED 核准	William	DWG NO. 圖號	PE1902002A

UNIT 單位: mm

PRODUCT NAME 產品名稱: ZH PH1.50mm Wire To Board SMT Right Angle Wafer